Martin Yale
INDUSTRIES, INC.

RELAY WIRING FOR PL215 / PL265

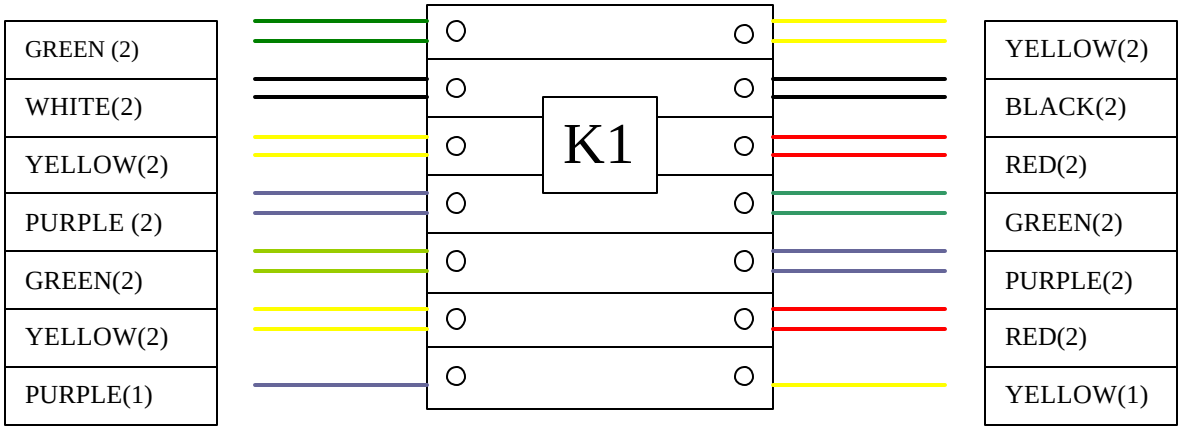

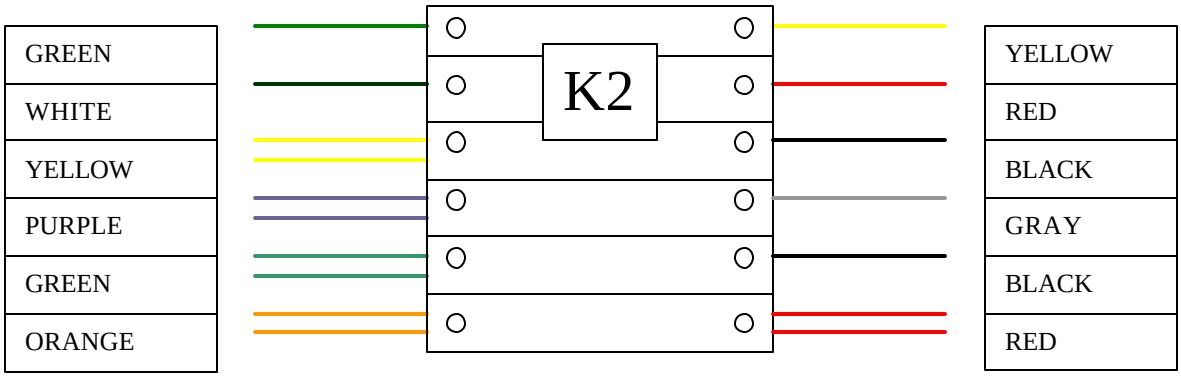

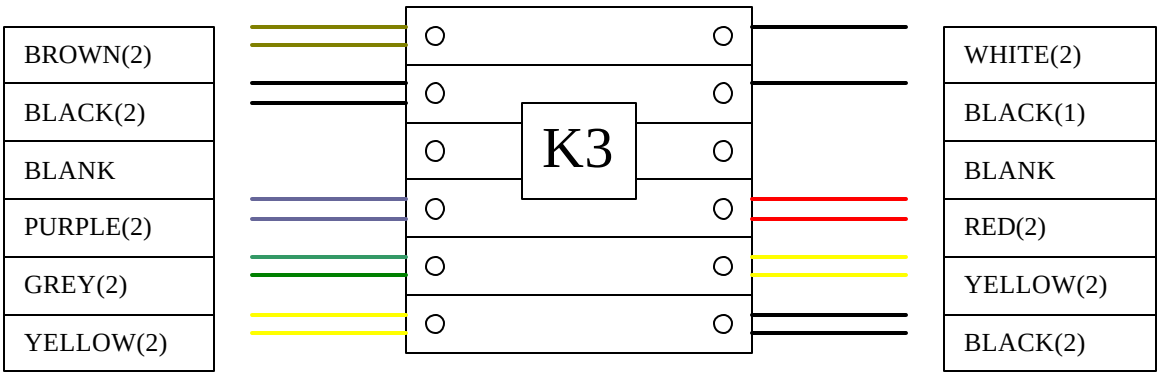

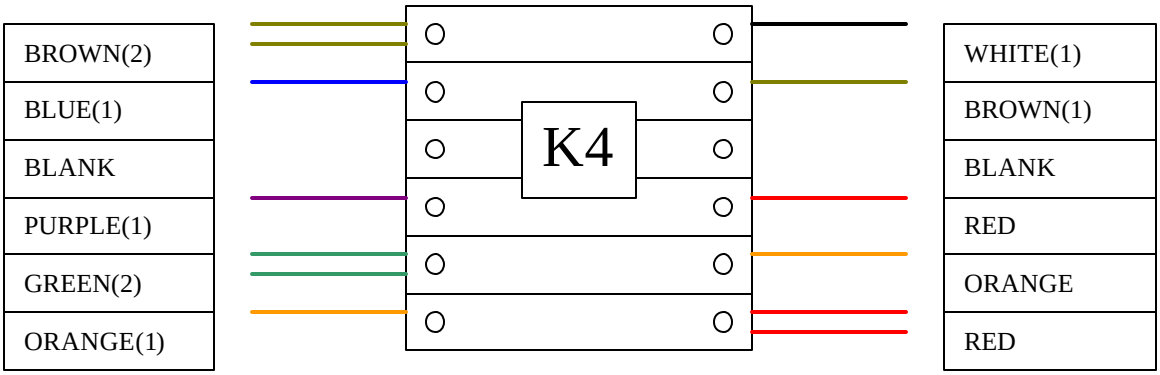

U=UPPER

L=LOWER
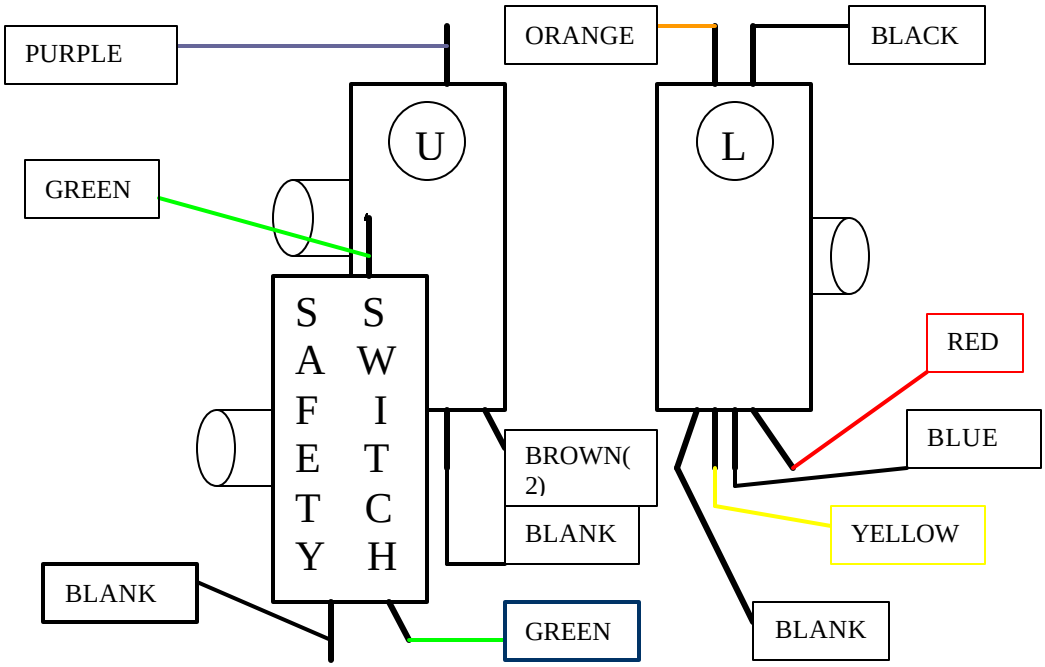
BLADE LIMIT SWITCH WIRING